T-KV 902

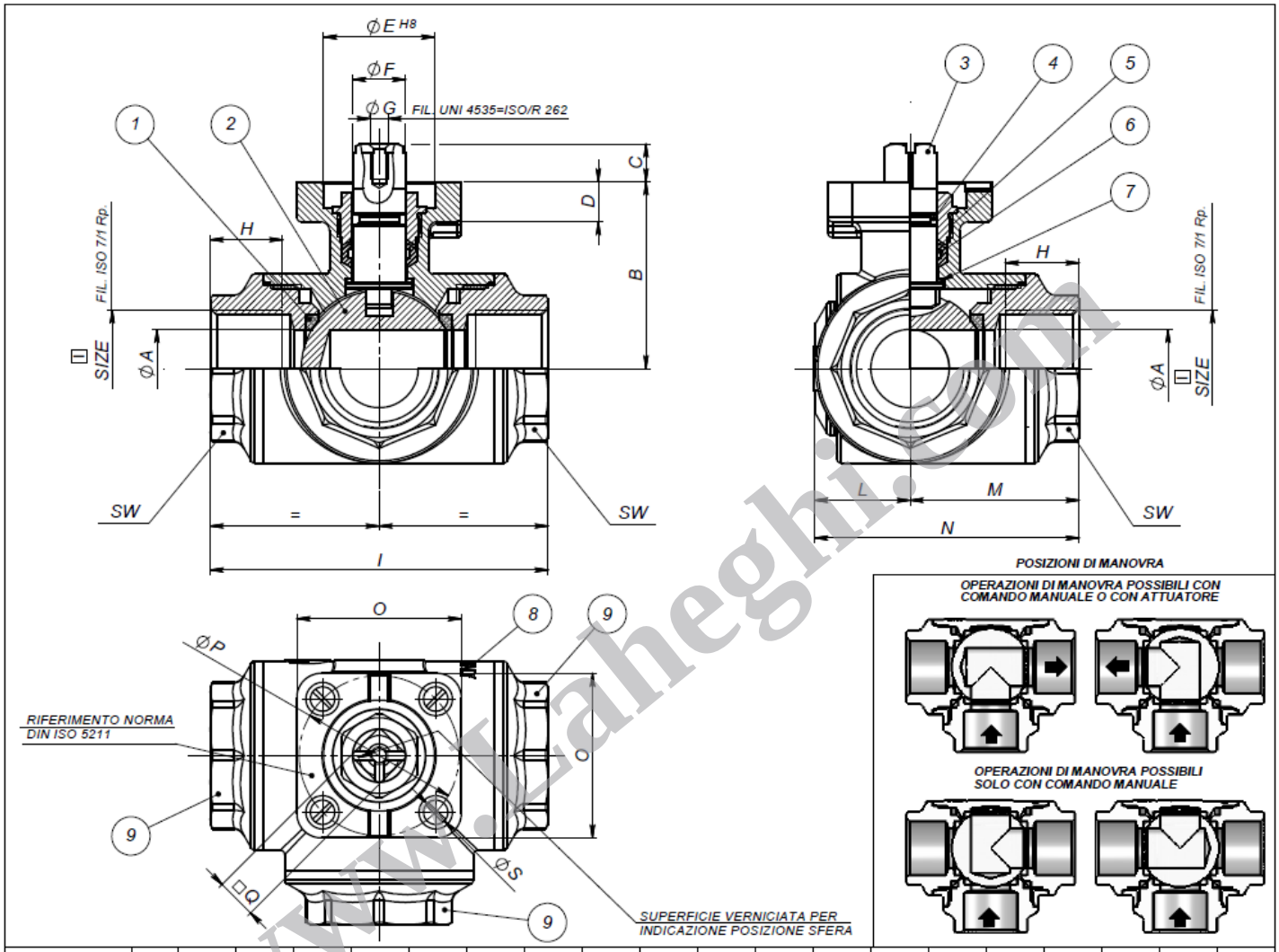

S1071N36	1"	25	25	46.5	9	9	25	11.9	M4	19.1	97	26	48.5	74.5	42	F3–F4	9	5.5	41	40
S1071N35	3/4"	20	17.6	42	9	9	25	11.9	M4	16.3	76	21.5	38	59.5	37	F3	9	5.5	31	40
S1071N34	1/2"	15	14.1	38	9	9	25	10.8	M4	15	64.5	17	32.5	49.5	37	F3	9	5.5	25	40
S1071N33	3/8"	10	10	38	9	9	25	10.8	M4	15	64.5	17	32.5	49.5	37	F3	9	5.5	25	40
S1071N32	1/4"	8	8	38	9	9	25	10.8	M4	15	64.5	17	32.5	49.5	37	F3	9	5.5	25	40
CODICE–CODE	SIZE	DN	ØA	B	C	D	ØE H8	ØF	ØG	H	I	L	M	N	O	ØP	□Q	ØS	SW	PN

www.Laheghi.com